THIS DRAWING AND THE SUBJECT MATTER SHOWN THEREON ARE CONFIDENTIAL AND THE PROPERTY OF BEL/STEWART/TRP CONNECTOR AND SHALL NOT BE REPRODUCED, COPIED, OR USED IN ANY MANNER WITHOUT THE WRITTEN CONSENT OF TRP CONNECTOR.

PRODUCT MAY BE PROTECTED BY ONE OR MORE OF THE FOLLOWING US PATENTS:
5736910 5939955 6425781 6428361 6554638 6840817 7123117
7429195 7717749 7808751 6217391 6149050 7924130

REVISIONS					
P	LTR REV	DESCRIPTION	DATE	DWN	APVD
	E	EC-1411035 COMPANY LOGO CHANGE	05JAN2015	HY	KZ

MECHANICAL:

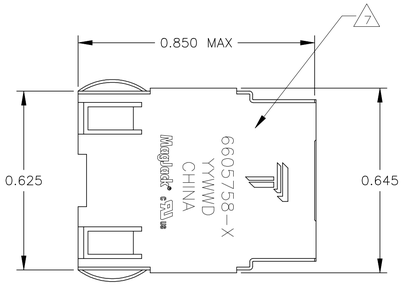

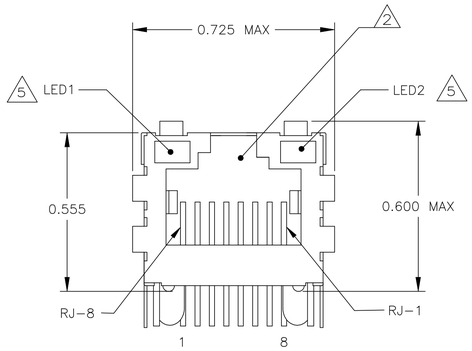

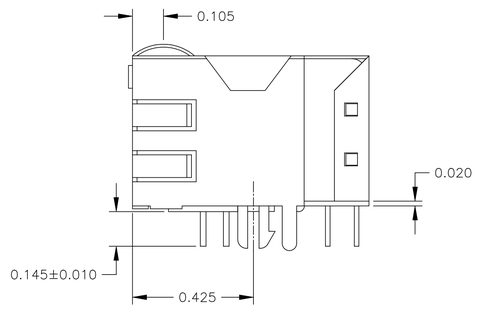

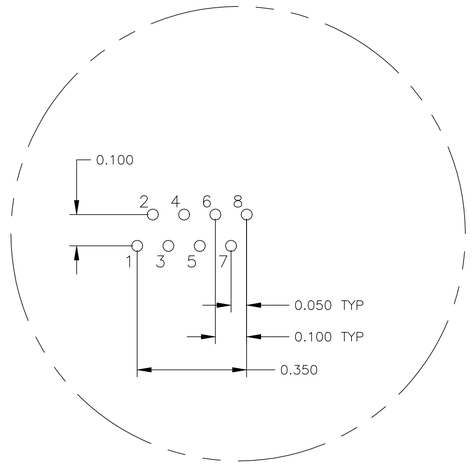

Pin Designations

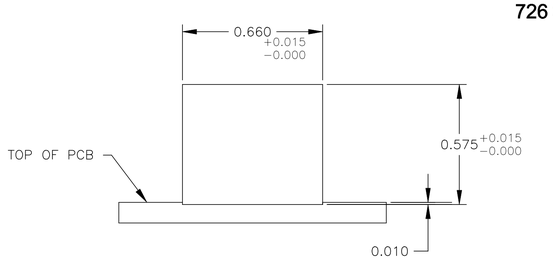

Suggested Panel Cutout

726 SERIES MAGNETIC CIRCUIT 3 6

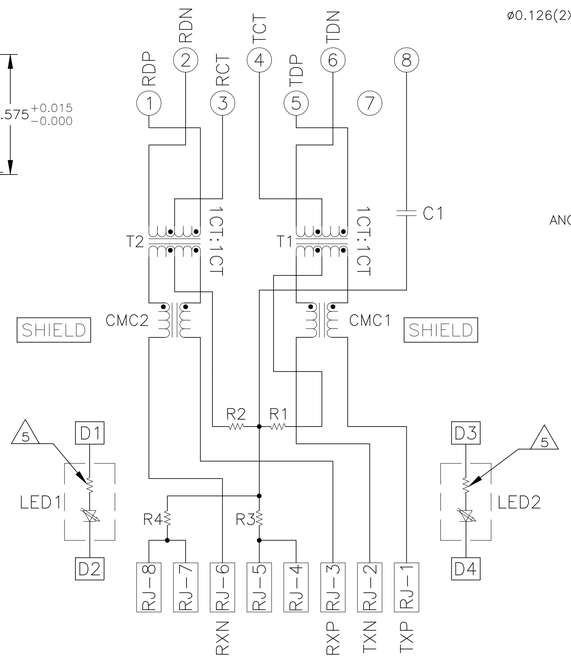

C1 = 1000pF. 2kV DECOUPLING CAPACITOR
R1-R4 = 75 OHMS, 1/16W, RESISTORS

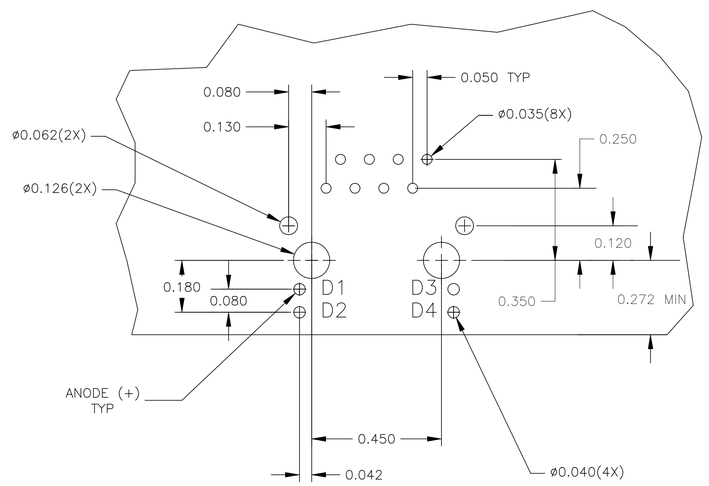

Suggested PCB Layout

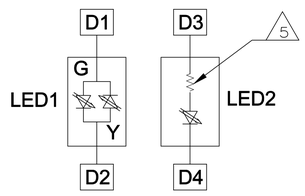

LED CONFIGURATION
FOR 5-6605758-4 ONLY

1 MATERIALS:
-HOUSING - THERMOPLASTIC PET POLYESTER FLAMMABILITY RATING UL 94V-0.
-SHIELD - .010" THICK, C26800 BRASS PREPLATED WITH 30µINCH MIN SEMI-BRIGHT NICKEL, SOLDER TABS POST DIPPED WITH 100µINCH MIN SAC SOLDER.
-MOD JACK CONTACTS - 0.0157" x 0.018" PHOSPHOR BRONZE, 50µINCH MIN OVERALL NICKEL UNDERPLATE, WITH SELECT 50µINCH MIN HARD GOLD FINISH PLATE. SOLDERTAILS WITH 100µINCH MIN MATTE TIN AND/OR SAC SOLDER DIP.
-LIGHT EMITTING DIODE(LED) - DIFFUSED EPOXY LENS, .020" x .020" CARBON STEEL WIREFRAME LEADS PRE-PLATED WITH 80µINCH SILVER OVER 40µINCH NICKEL UNDERPLATE OVER 40µINCH COPPER UNDERPLATE, POST-PLATED WITH 100µINCH MIN MATTE TIN AND/OR SAC SOLDER DIP OR PURE TIN SOLDER DIP.

2 RJ45 JACK CAVITY CONFORMS TO FCC RULES AND REGULATIONS PART 68, SUB PART F.

3 MAGNETICS
-IMPEDANCE: 100 OHMS
-TURNS RATIO (CHIP:CABLE): TX = 1:1, RX = 1:1
-OPEN CIRCUIT INDUCTANCE (OCL): 350µH MIN @100kHz, 0.1VRMS, 8mADC BIAS FROM 0°C TO 70°C, TX AND RX
-PERFORMANCE @ 25°C:
INSERTION LOSS (IL): 1.1dB MAX FROM 0.5MHz TO 100MHz
RETURN LOSS (RL): 18dB MIN FROM 0.5MHz TO 30MHz
18-20LOG(f/30)dB MIN FROM 30.1MHz TO 60MHz
12dB MIN FROM 60.1MHz TO 80MHz
CROSSTALK ATTENUATION: 35dB MIN FROM 0.5MHz TO 40MHz
33-20LOG(f/50)dB MIN FROM 40.1MHz TO 100MHz
COMMON MODE REJECTION RATIO (CMRR): 30dB MIN FROM 0.5MHz TO 100MHz
-ISOLATION VOLTAGE:2250VDC (MAX) FOR 60 SECONDS WITH A RISE TIME OF 500V/SEC.

4. OPERATING TEMPERATURE:FROM 0°C TO +70°C.

5 THE 250 OHM LED RESISTORS ARE OPTIONAL, PLEASE SEE CHART FOR PRESENCE OR ABSENCE OF LED RESISTORS. IF THE LED WITHOUT 250 OHM RESISTORS, LED IS DRIVEN WITH CONSTANT CURRENT AT APPROX 20mA.
LED COLOR: DOMINANT WAVELENGTH (λD): GREEN 568 nm TYP. at IF=20mA
FORWARD VOLTAGE (VF): GREEN 2.2V TYP. at IF=20mA
DOMINANT WAVELENGTH (λD): YELLOW 588 nm TYP. at IF=20mA
FORWARD VOLTAGE (VF): YELLOW 2.1V TYP. at IF=20mA.
IF THE LED WITH 250 OHM RESISTORS,LED IS DRIVEN WITH 5V VOLTAGE AND THE MAX OPERATING CURRENT IS 20mA.
LED COLOR : DOMINANT WAVELENGTH (λD): GREEN 568 nm TYP. At VF=5V
FORWARD CURRENT (IF): GREEN 12 mA TYP. at VF=5V
DOMINANT WAVELENGTH (λD): YELLOW 588 nm TYP. At VF=5V

6 INDICATED CONNECTIONS ARE FOR NIC CONFIGURATION. THE MAGNETICS ARE SYMMETRICAL, AND SUPPORT AUTO-MDI/MDIX.

7 TRP CONNECTOR LOGO, PART NUMBER, DATE CODE, COUNTRY OF ORIGIN AND AGENCY APPROVAL MARKING IN APPROXIMATE LOCATION SHOWN.

8. THESE PARTS ARE RECOMMENDED FOR WAVE SOLDERING PROCESS,PEAK WAVE SOLDERING TEMPERATURE IS 265°C MAX,10 SECONDS MAX.

	2KV DECOUPLING CAPACITOR	LED1	250 OHMS RESISTOR 5	LED2	250 OHMS RESISTOR 5	PART NUMBER
	YES	GREEN	YES	GREEN	YES	6-6605758-1
OBSOLETE	YES	YELLOW	NO	GREEN	NO	~~5-6605758-9~~
	YES	GREEN	NO	YELLOW	NO	5-6605758-8
	YES	GREEN	NO	GREEN	NO	5-6605758-7
OBSOLETE	YES	GREEN/YELLOW	YES	GREEN	YES	~~5-6605758-4~~
OBSOLETE	YES	YELLOW	YES	GREEN	YES	~~5-6605758-2~~
	YES	GREEN	YES	YELLOW	YES	5-6605758-1
OBSOLETE	NO	GREEN	YES	GREEN	YES	~~1-6605758-1~~

THIS DRAWING IS A CONTROLLED DOCUMENT.

DIMENSIONS: INCHES

TOLERANCES UNLESS OTHERWISE SPECIFIED:
0 PLC ± -
1 PLC ± -
2 PLC ± .010
3 PLC ± .005
4 PLC ± -
ANGLES ± -

PRODUCT SPEC 108-2100
APPLICATION SPEC -

DWN 03MAR2005 L. VARELA - DOCKS
CHK 03MAR2005 D. FAROLE
APVD 03MAR2005 D. FAROLE

MODEL NAME: MAGJACK SINGLE NON-POE

trp CONNECTOR a bel group — DONGGUAN CHINA

DESC: 1X1 726 10/100 TAB UP W/ LED

SIZE A1 | CAGE CODE | DRAWING NO C-6605758 | RESTRICTED TO -

CUSTOMER DRAWING | SCALE 1:1 | SHEET 1 OF 1 | REV E